Assembly Guide Model KF.Y1075

1

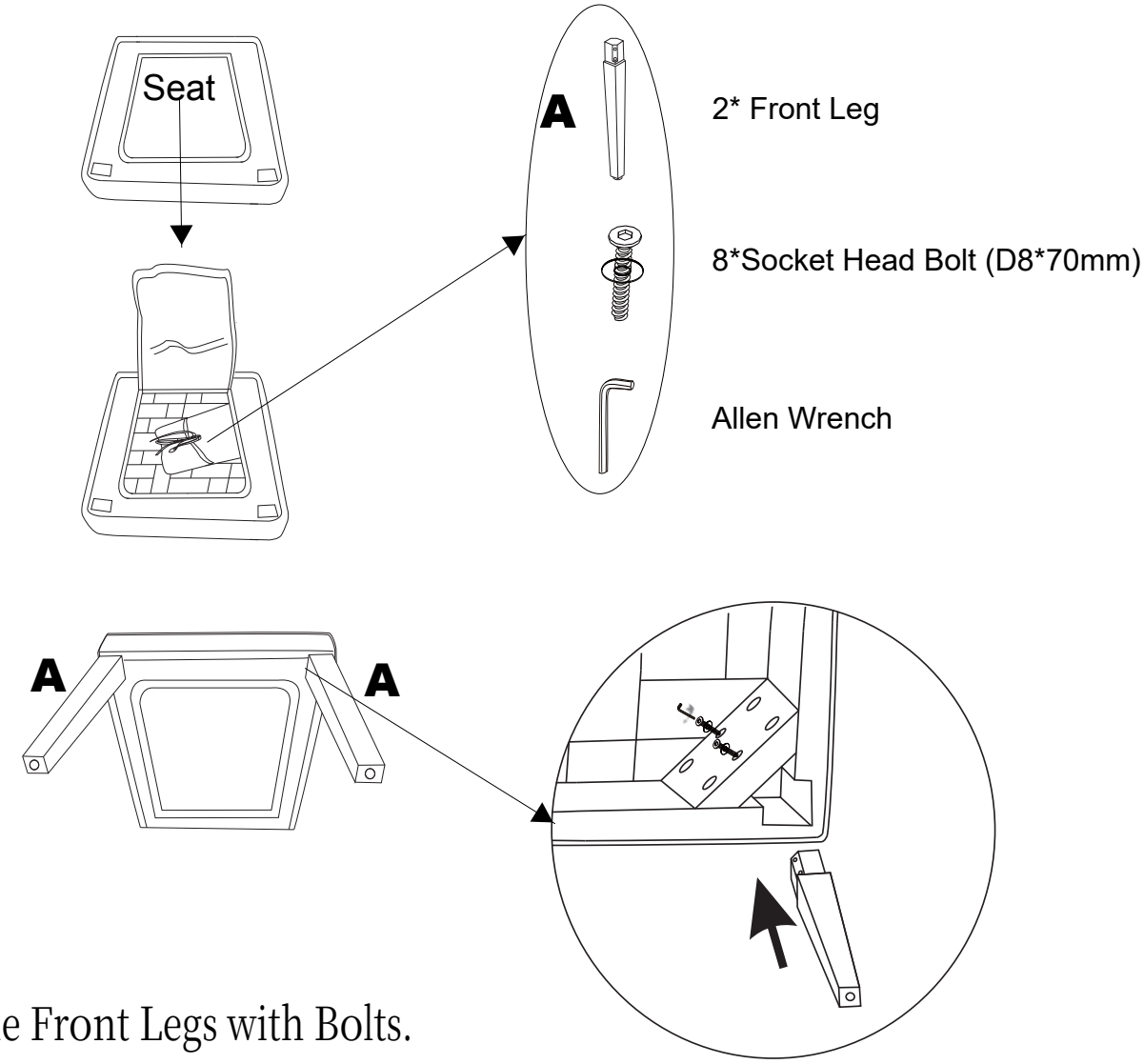

Fix the Front Legs with Bolts.

2

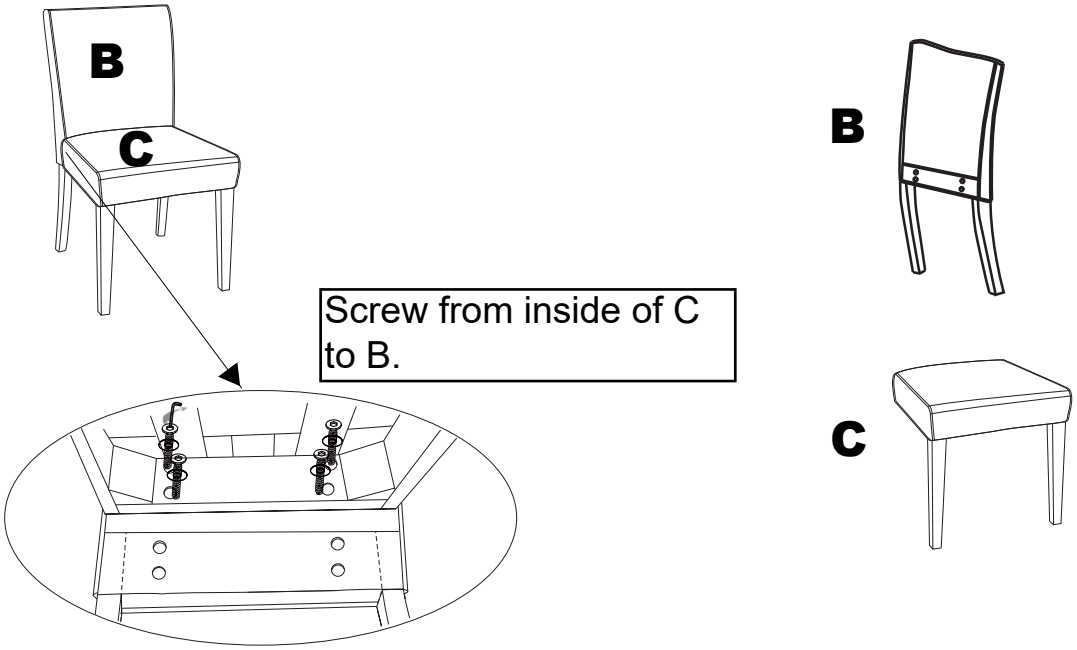

Connect the Backrest and Seat with Bolts.